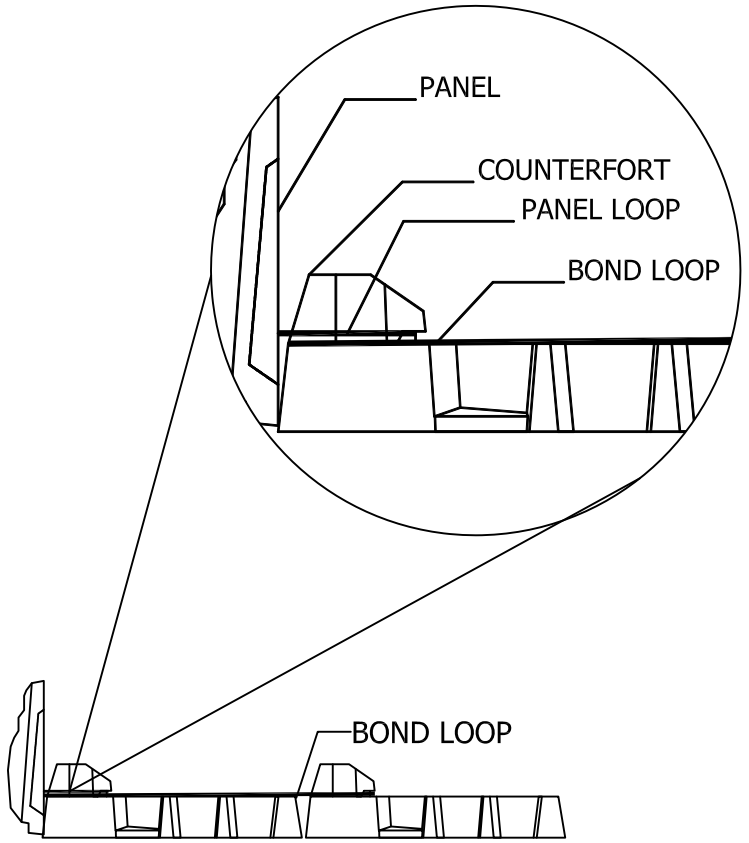

SECTION

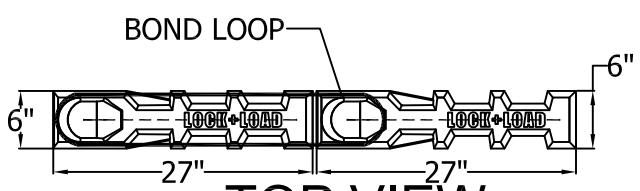

TOP VIEW

NOTE:
MATERIAL IS 1/4" DIA. T304 STAINLESS STEEL WIRE ASTM A580
ALL DIMENSIONS OUTSIDE TO OUTSIDE INCLUDING RADIUS

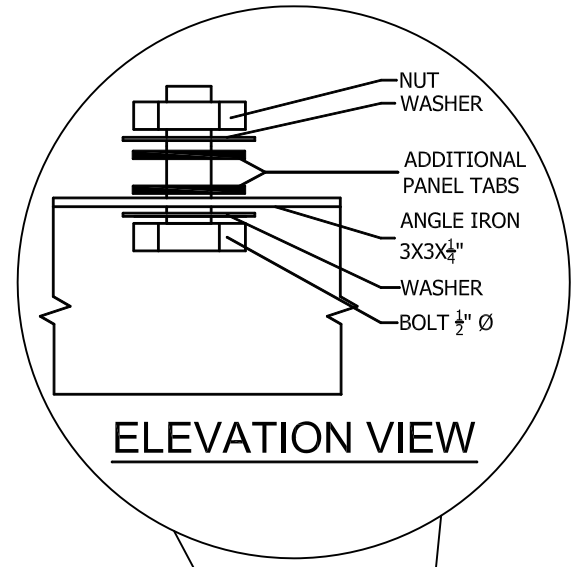

ELEVATION VIEW

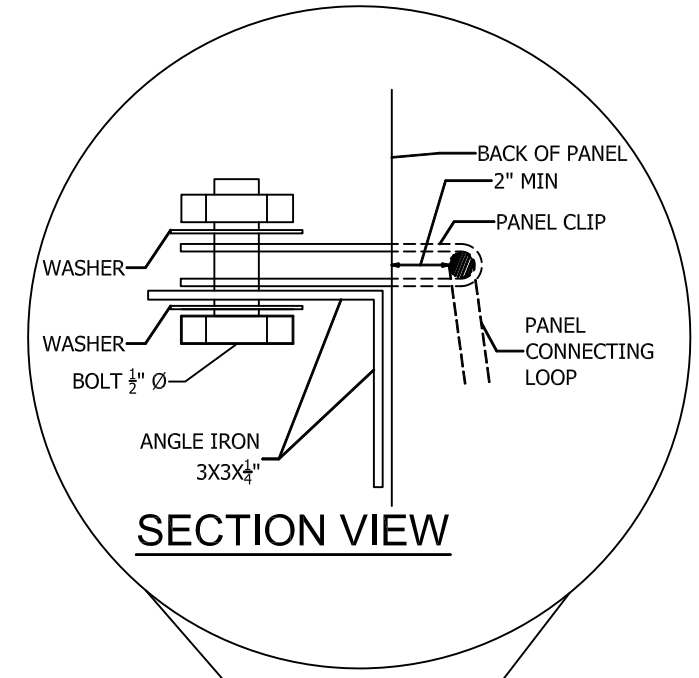

SECTION VIEW

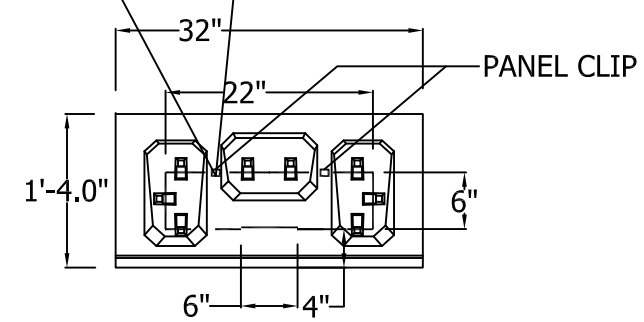

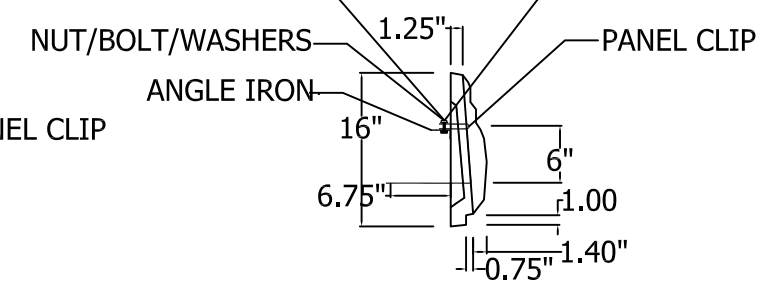

ELEVATION VIEW

NOTE:
MATERIAL IS 1/4" DIA. T304 STAINLESS STEEL WIRE ASTM A580
ALL DIMENSIONS OUTSIDE TO OUTSIDE INCLUDING RADIUS
ANGLE IRON, WASHERS, NUTS, BOLTS ARE ALL STAINLESS STEEL T304 ASTM
DETAIL FOR SPECIAL PANELS ONLY AROUND VERTICAL OBSTRUCTION

ASTM CODES:
A276 - 10 - ANGLE IRON
F593 - BOLTS
F594 - NUTS
A276 - WASHERS

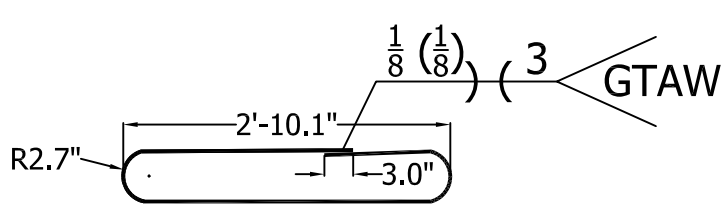

TOP

SIDE FRONT

BOND LOOP DETAIL

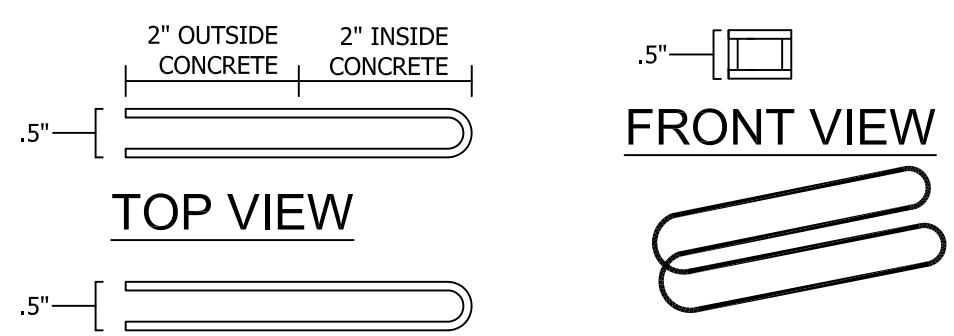

TOP VIEW

SIDE VIEW

FRONT VIEW

PICTORIAL

PANEL CLIP DETAIL

NOTE:
MATERIAL IS 1/4" DIA. T304 STAINLESS STEEL WIRE ASTM A 580
ALL DIMENSIONS OUTSIDE TO OUTSIDE INCLUDING RADIUS

REV #	DESCRIPTION	DATE

LOCK+LOAD™
RETAINING WALL SYSTEMS
1681 CHESTNUT STREET, SUITE 400, VANCOUVER, B.C. V6J 4M6
Tel:(604) 732-9990 Toll Free: 1-877-901-9998 Fax: (604) 737-1140
Web site: www.lock-load.com

DRAWING NAME	VERTICAL OBSTRUCTION DETAIL
PROJECT NAME	TYPICAL DETAILS
LOCATION	
CITY	COUNTRY
DRAWN BY KJA	DATE 01/06/12
APPROVED BY R. COGLAS	PREPARED FOR
SCALE N.T.S.	
OUR PROJECT NUMBER	OUR DRAWING NUMBER
CUSTOMER DRAWING	LL-WSDOT-7B-VERTICAL OBSTRUCTION